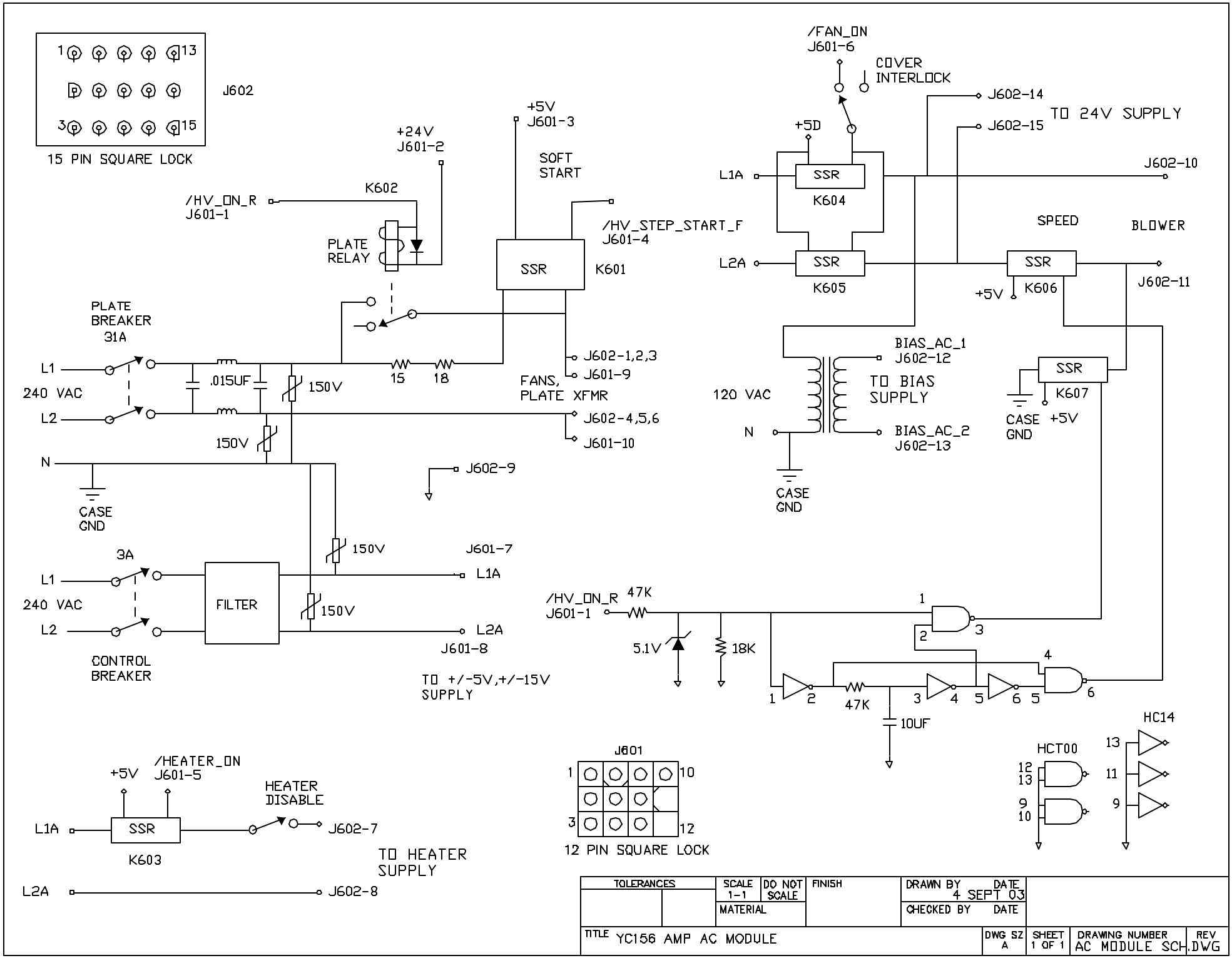
J602
15 PIN SQUARE LOCK
/FAN_ON
J601-6
COVER
INTERLOCK
J602-14
TO 24V SUPPLY
J602-15
+5V
J601-3
+24V
J601-2
SOFT
START
+5D
L1A
SSR
K604
J602-10
K602
/HV_ON_R
J601-1
/HV_STEP_START_F
J601-4
SPEED
BLOWER
PLATE
RELAY
SSR
K601
L2A
SSR
K605
SSR
K606
J602-11
+5V
PLATE
BREAKER
31A
J602-1,2,3
J601-9
L1
.015UF
150V
15
18
FANS,
PLATE XFMR
BIAS_AC_1
J602-12
SSR
240 VAC
L2
J602-4,5,6
120 VAC
TO BIAS
SUPPLY
K607
150V
J601-10
N
BIAS_AC_2
J602-13
CASE
GND
+5V
CASE
GND
J602-9
CASE
GND
3A
150V
J601-7
L1
L1A
240 VAC
FILTER
150V
/HV_ON_R
J601-1
47K
L2
L2A
J601-8
5.1V
18K
CONTROL
BREAKER
TO +/-5V,+/-15V
SUPPLY
47K
10UF
HC14
HCT00
J601
+5V
/HEATER_ON
J601-5
HEATER
DISABLE
L1A
SSR
J602-7
K603
TO HEATER
SUPPLY
12 PIN SQUARE LOCK
L2A
J602-8
TOLERANCES
SCALE
1-1
DO NOT
SCALE
FINISH
DRAWN BY
DATE
4 SEPT 03
MATERIAL
CHECKED BY
DATE
TITLE
YC156 AMP AC MODULE
DWG SZ
A
SHEET
1 OF 1
DRAWING NUMBER
AC MODULE SCH.DWG
REV