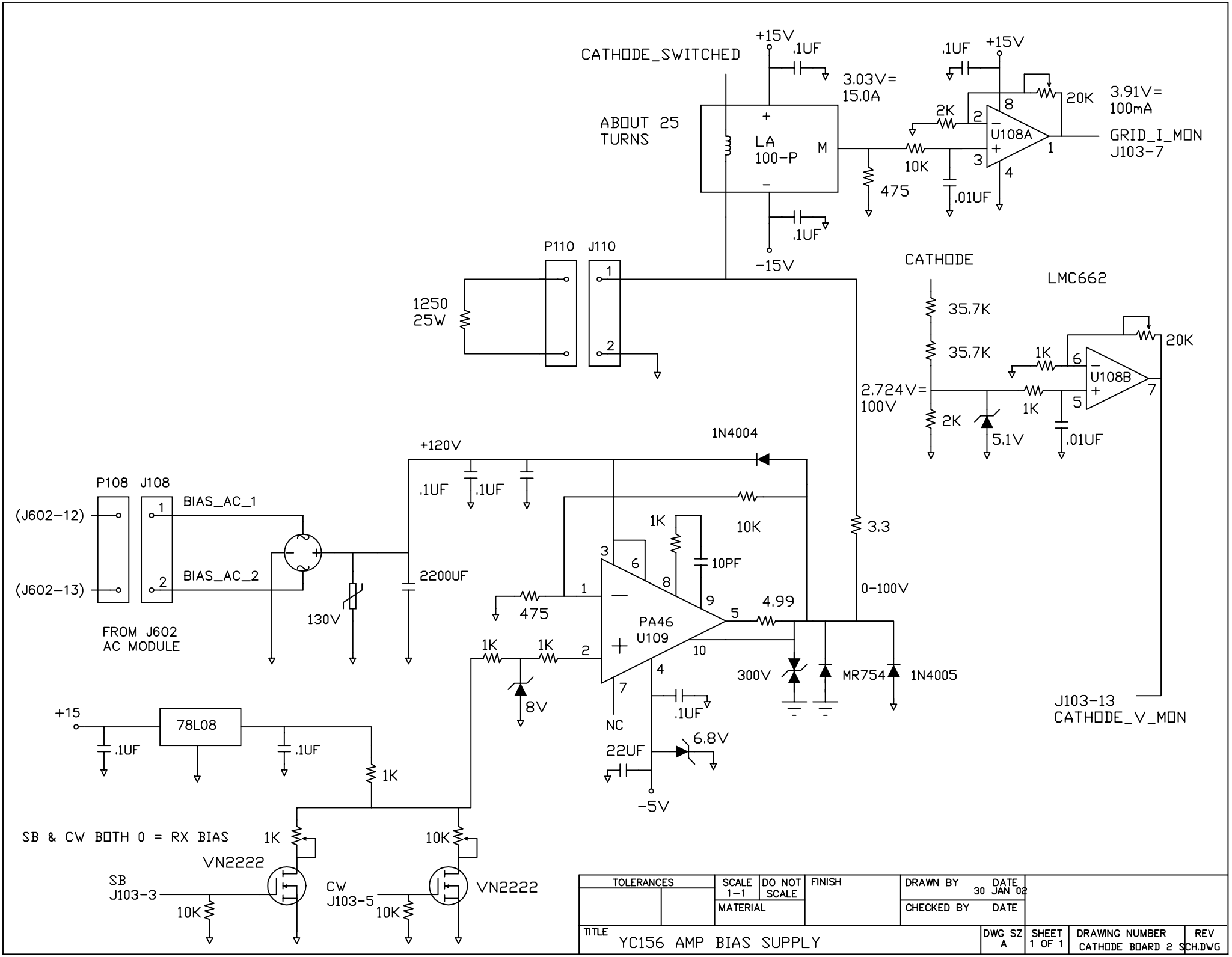
CATHODE_SWITCHED
+15V
.1UF
3.03V=
15.0A
ABOUT 25
TURNS
LA
100-P
M
-15V
475
10K
2K
U108A
20K
3.91V=
100mA
GRID_I_MON
J103-7
.01UF
P110
J110
1250
25W
CATHODE
LMC662
35.7K
35.7K
2.724V=
100V
2K
5.1V
1K
U108B
20K
.01UF
+120V
1N4004
.1UF
P108
J108
(J602-12)
(J602-13)
BIAS_AC_1
BIAS_AC_2
FROM J602
AC MODULE
130V
2200UF
1K
10K
10PF
3.3
0-100V
475
PA46
U109
4.99
1K
1K
8V
NC
300V
MR754
1N4005
J103-13
CATHODE_V_MON
+15
78L08
.1UF
1K
22UF
6.8V
-5V
SB & CW BOTH 0 = RX BIAS
VN2222
SB
J103-3
CW
J103-5
TOLERANCES
SCALE 1-1
DO NOT SCALE
FINISH
DRAWN BY
DATE 30 JAN 02
MATERIAL
CHECKED BY
DATE
TITLE
YC156 AMP BIAS SUPPLY
DWG SZ A
SHEET 1 OF 1
DRAWING NUMBER
CATHODE BOARD 2 SCH.DWG
REV